SALES DRAWING SALES DRAWING

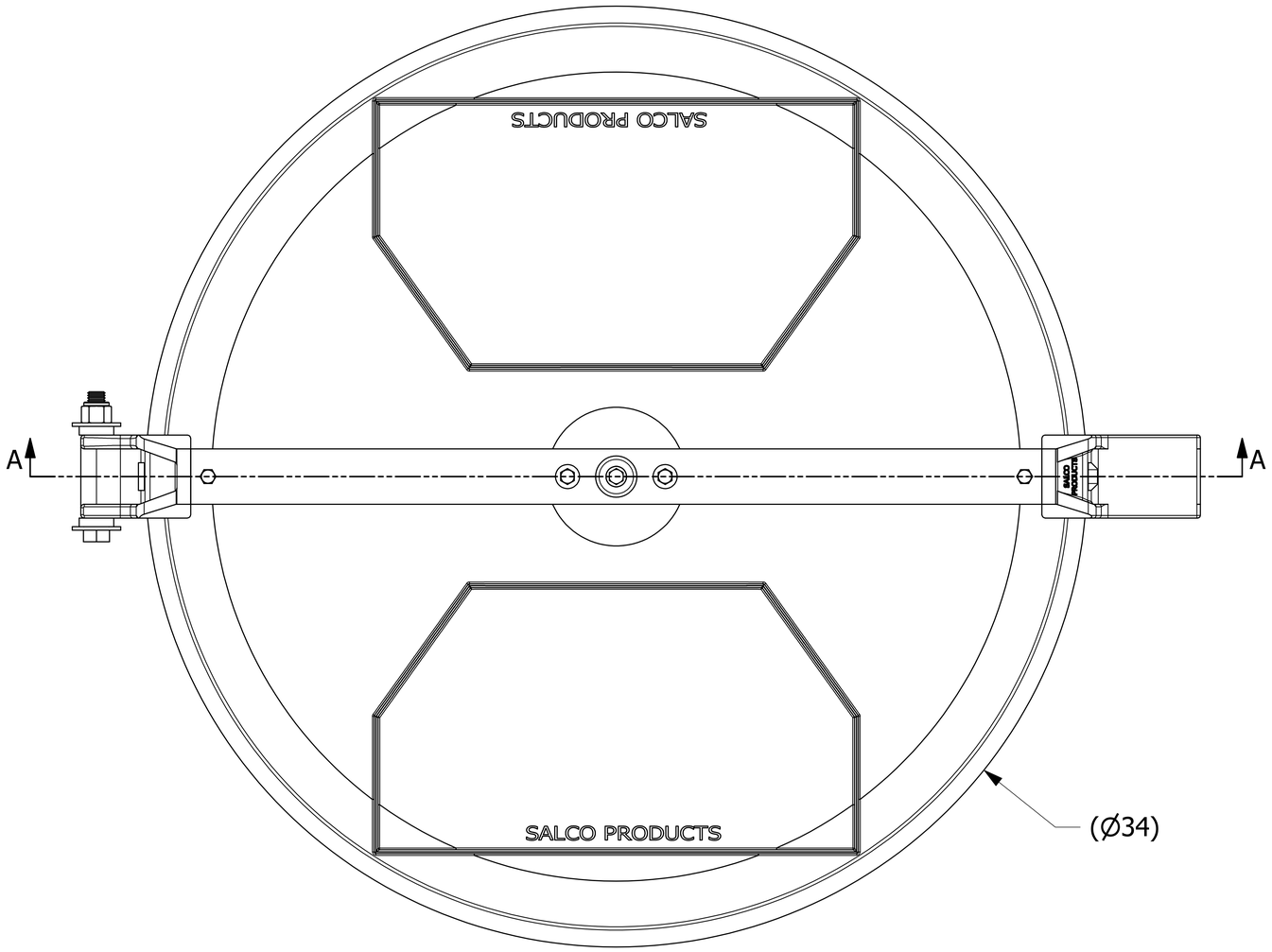

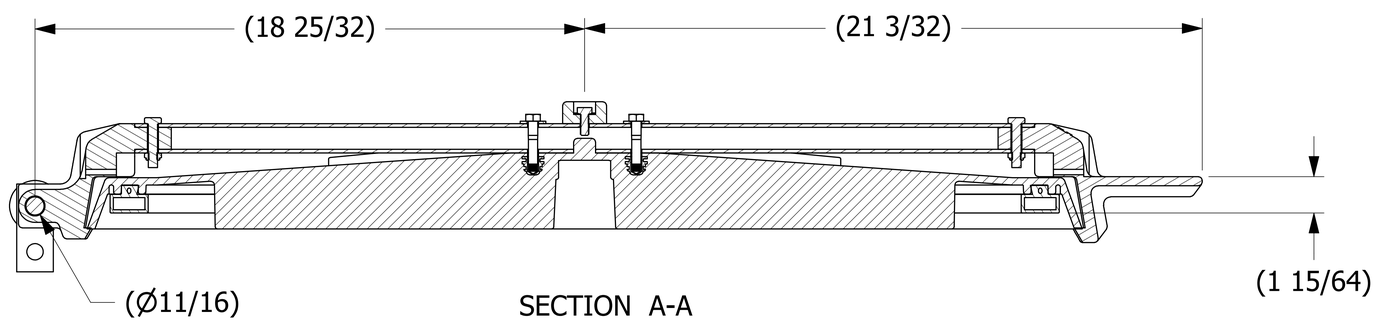

SECTION A-A

REV	BY	DATE	DESCRIPTION
B	BRG	7-22-09	UPDATED DRAWING WITH NEW PHC3007AS
A	PJG	8-27-08	NEW PART ADDED TO SYSTEM

UNLESS OTHERWISE SPECIFIED DIMENSIONAL TOLERANCES
FRACTIONAL: ±1/16
X.XX: ±.03
X.XXX: ±.015
ANGULAR: ±1°
DEBURR ALL SHARP EDGES. ALL MACHINED SURFACES TO HAVE A 125 RMS FINISH UNLESS NOTED OTHERWISE.
THIRD ANGLE PROJECTION

DRAWN BY:	PJG
CHECKED BY:	
PROTOTYPE BY:	PJG
PROTOTYPE DATE:	10/18/2016
APPROVED FOR PRODUCTION BY:	PJG
PRODUCTION DATE:	8/27/2008

SALCO PRODUCTS, INC.

PART NAME: HATCH COVER 30"

MATERIAL: SEE BOM

PROJECT #: 060314 | SHEET #: 1 OF 1 | SCALE: 1:1

DRAWING #: E24458 | PART #: PHC3007ACA

THIS PRINT, PROPERTY OF SALCO PRODUCTS INC, CONTAINS PROPRIETARY INFORMATION AND MUST NOT BE COPIED, REPRODUCED, OR USED DETRIMENTALLY TO OUR INTEREST.

SALES DRAWING SALES DRAWING